Printer Parts

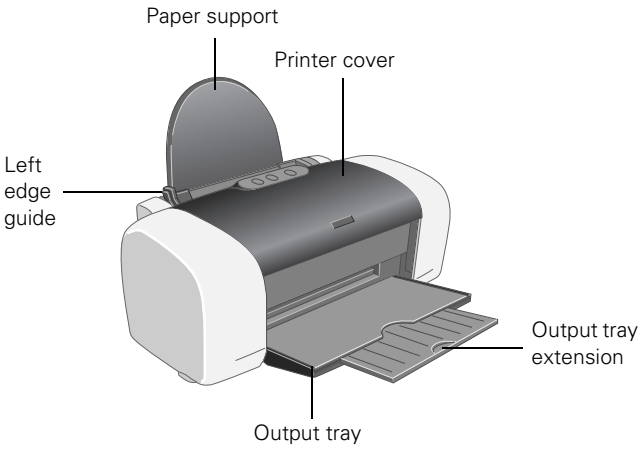

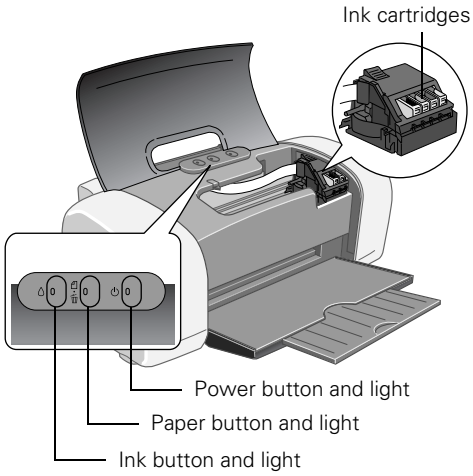

Accessories

Ink Cartridges

Cartridge	Part number
Black	T044120
Cyan	T044220
Magenta	T044320
Yellow	T044420
Color multi-pack	T044520

Media

EPSON paper name	Size	Part number
Premium Bright White Paper	Letter	S041586
Photo Quality Ink Jet Paper	Letter A4 Legal	S041062 S041061 S041067
Photo Quality Ink Jet Cards	A6	S041054
Glossy Photo Paper (Photo Paper)	4 × 6 - 20 sheets 4 × 6 - 50 sheets Letter - 20 sheets Letter - 50 sheets Letter - 100 sheets Letter - 500 sheets A4	S041134 S041671 S041141 S041649 S041271 S041272 S041140
Matte Paper Heavyweight	Letter	S041257
Double-Sided Matte Paper	Letter	S041568
Premium Semigloss Photo Paper	Letter	S041331
Ink Jet Transparencies	Letter	S041064
DURABrite® Ink Glossy Photo Paper	Letter 4 × 6	S041731 S041734

Printer Specifications

Printing

Printing method	On-demand ink jet
Nozzle configuration	
Black	90 nozzles
Color	87 nozzles (29 each: cyan, magenta, yellow)
Print direction	Bidirectional with logic seeking
Control code	ESC/P2® Raster EPSON Remote
Interface	USB

Mechanical

Paper feed method	Friction
Paper path	Sheet feeder, rear entry
Sheet feeder capacity	100 sheets of 24 lb (90 g/m^2) paper
Dimensions	
Storage	Width: 17.7 inches (450 mm) Depth: 9.5 inches (242 mm) Height: 7.6 inches (192 mm)
Printing	Width: 17.7 inches (450 mm) Depth: 17.2 inches (437 mm) Height: 12.1 inches (308 mm)
Weight	8.6 lb (3.9 kg) without ink cartridges

Electrical

Specification	Value
Input voltage range*	90 to 264 V
Rated frequency range	50 to 60 Hz
Input frequency range	49.5 to 60.5 Hz
Rated current	0.2 to 0.4 A
Power consumption	Approx. 12 W (ISO 10561 Letter Pattern) Approx. 4.5 W in sleep mode Approx. 0.8 W in power-off mode

* Check the label on the back of the printer for your printer's voltage.

Environmental

Temperature	
Operation	50 to 95 °F (10 to 35 °C)
Storage*	–4 to 140 °F (–20 to 60 °C) 1 month at 104 °F (40 °C)
Transit*	–4 to 140 °F (–20 to 60 °C) 120 hours at 140 °F (60 °C)
Humidity (without condensation)	
Operation	20 to 80% RH
Storage*	5 to 85% RH

* Stored in shipping container without condensation

Safety Approvals

Safety standards	UL 1950, CSA No. 950
EMC	FCC part 15 subpart B class B CSA C22.2 Class B

Ink Cartridges

Specification	Black ink cartridge (T044120)	Color ink cartridges (T044220, T044320, T044420)
Color(s)	Black	Cyan, magenta, yellow
Print capacity	540 pages/A4 ISO/IEC 10561 Letter Pattern; 400 pages at 5% coverage	400 pages at 5% coverage
Cartridge life	2 years from production date (if unopened) within 6 months after opening package, at 77 °F (25 °C)	
Storage temperature	–4 to 104 °F (–20 to 40 °C) 1 month at 104 °F (40 °C)	
Transit temperature	–22 to 122 °F (–30 to 50 °C) 10 days at 122 °F (50 °C)	
Freezing temperature*	3.2 °F (–16 °C)	
Dimensions	0.5 × 2.9 × 2.2 inches (W × D × H) 12.7 × 73.5 × 55.3 mm (W × D × H)	

** Ink thaws and is usable after approximately 3 hours at 77 °F (25 °C).

Caution:
To ensure good results, use genuine EPSON cartridges and do not refill them. Other products may cause damage to your printer not covered by EPSON's warranties.

Don't use an ink cartridge if the date on the package has expired.

Paper

Paper type	Size	Paper types	Thickness	Weight
Single sheets	Letter (8.5 × 11 inches) Legal (8.5 × 14 inches) Half letter (statement, 5.5 × 8.5 inches) Executive (7.5 × 10 inches) 4 × 6 A4 (210 × 297 mm) A5 (148 × 210 mm) A6 (105 × 148 mm) User-defined: Width: 3.5 to 8.3 inches Length: 3.5 to 44 inches	Plain bond paper and special ink jet papers distributed by EPSON	0.003 to 0.004 inch (0.08 to 0.11 mm) for plain bond paper	17 to 24 lb (64 to 90 g/m^2) for plain bond paper
Envelopes	No. 10, 4.1 × 9.5 inches (104 × 241 mm) DL, 4.3 × 8.7 inches (110 × 220 mm) C6, 4.4 × 6.4 inches (114 × 162 mm) 132 × 220 (5.2 × 8.7 inches)	Plain bond paper or air mail paper	0.006 to 0.02 inch (0.16 to 0.52 mm)	12 to 20 lb (45 to 75 g/m^2)
Premium Bright White Paper	Letter (8.5 × 11 inches)	Premium Bright White Paper distributed by EPSON	—	—
Ink Jet Paper	Letter (8.5 × 11 inches) Legal (8.5 × 14 inches) A4 (210 × 297 mm)	Ink Jet Paper distributed by EPSON	—	—
Ink Jet Cards	A6 (105 × 148 mm)	Ink Jet Cards distributed by EPSON	—	—
Glossy Photo Paper or Photo Paper	Letter (8.5 × 11 inches) A4 (210 × 297 mm) 4 × 6 inches (114 × 175 mm)	Glossy Photo Paper or Photo Paper distributed by EPSON	—	—
Matte Paper Heavyweight	Letter (8.5 × 11 inches)	Matte paper distributed by EPSON	—	—
Double-Sided Matte Paper	Letter (8.5 × 11 inches)	Double-Sided Matte Paper distributed by EPSON		
Premium Semigloss Photo Paper	Letter (8.5 × 11 inches)	Premium Glossy Photo Paper or Premium Semi Gloss Photo Paper distributed by EPSON	—	—
DURABrite Ink Glossy Photo Paper	Letter (8.5 × 11 inches) 4 × 6 inches (114 × 175 mm)			
Transparencies	Letter (8.5 × 11 inches)	Transparencies distributed by EPSON	—	—

Note:
Always load paper into the sheet feeder short edge first. Load envelopes flap edge left with the flap side down.

Since the quality of any particular brand or type of paper may be changed by the manufacturer at any time, EPSON cannot attest to the quality of any non-EPSON brand or type of paper. Always test samples of paper stock before purchasing large quantities or printing large jobs.

Poor quality paper may reduce print quality and cause paper jams and other problems. If you encounter problems, switch to a higher grade of paper.

Do not load curled or folded paper.

Use papers under these conditions:
Temperature:59 to 77 °F (15 to 25 °C)
Humidity:40 to 60% RH

Printable area

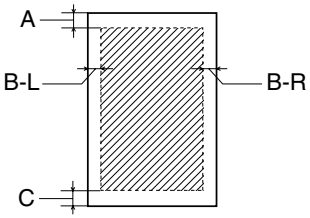

Single sheets or ink jet cards

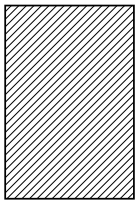
4 × 6 Borderless*

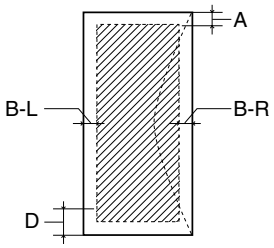

Envelopes

A: 0.12 inch (3.0 mm)
B-L: 0.12 inch (3.0 mm)
B-R: 0.12 inch (3.0 mm)
C: 0.12 inch (3.0 mm)
D: 0.78 inch (20.0 mm)
* When printing with the 4 × 6 Borderless feature, print quality may decline in the expanded area. Before printing large jobs using the borderless setting, print a single sheet to confirm printout quality.

Control Panel

To diagnose some problems, check the printer's control panel, as described below, or run a printer check (see page 6).

Lights	Explanation
Green ⏻ power light flashes	The printer is receiving a print job, replacing an ink cartridge, charging ink, or cleaning the print head.
Red paper light is on	Your paper ran out. Load more paper, then press the paper button to resume printing.
Red paper light flashes	Paper is jammed in the printer. Press the paper button to eject the paper. If that doesn't work, turn off the printer, open the cover, and pull the paper out from the front, including any torn pieces. Then turn on the printer, reload paper, and press the paper button.
Red ◊ ink light flashes	One of the cartridges is low on ink. Check the message that appears on your screen to determine which cartridge is low. Make sure you have a replacement cartridge.
Red ◊ ink light is on	One of the cartridges is out of ink or not installed. Make sure you have a replacement cartridge, then follow the steps on page 6 to install it. If you have just installed a new cartridge, it may be incompatible with the printer or incorrectly installed. Reinstall it or replace it with the correct cartridge as described on page 6.
Green ⏻ power light and red ◊ ink light are on	An ink cartridge is not installed correctly. Reinstall it as described on page 6.
Red ◊ paper light and red ◊ ink light flash	Paper may be blocking movement of the print head. Turn off the printer, then open the cover and remove any jammed paper or other foreign objects. Turn the printer back on. If the lights are still on, contact your dealer or EPSON as described on your *Start Here* sheet.
Green ⏻ power light is off and red paper light and red ◊ ink light are flashing	The printer may have an internal error. Turn off the printer, wait a few seconds, and turn it on again. If the lights are still flashing, contact your dealer or EPSON as described on your *Start Here* sheet.

Installing the First Ink Cartridges

1. Turn on the printer.
2. Lower the printer's output tray, pull out the extension, and open the cover.

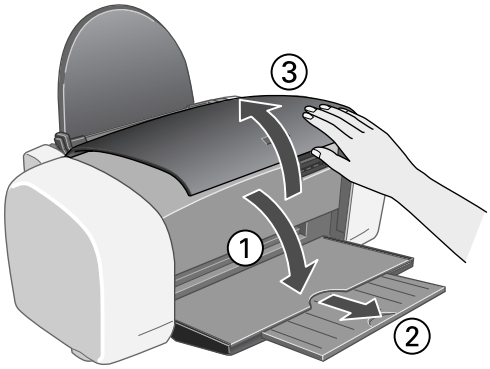

3. Shake the package of ink cartridges four or five times. Then remove the cartridges from the package. (Don't shake them after removing the packaging.)

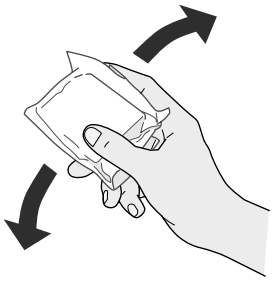

Caution:
Don't touch the green circuit board on the front of the cartridge; you may inhibit normal operation and printing.

4. Open the cartridge cover.

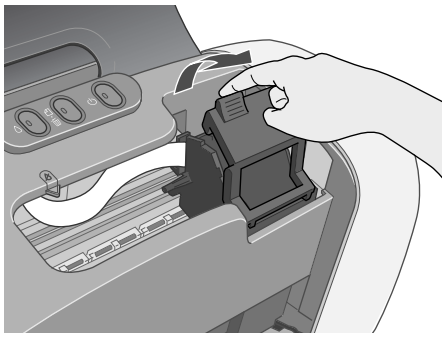

5. Lower each ink cartridge down into its holder with the green circuit board facing the front. Then gently push each ink cartridge down until it is firmly seated.

   The color of the cartridge label should match the marker on the holder.

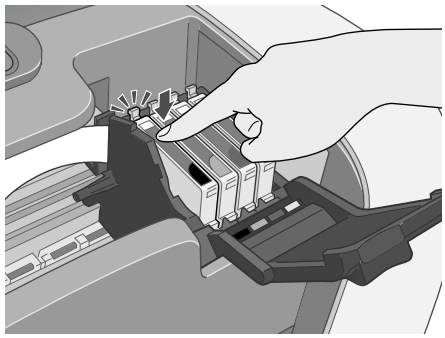

6. Close the cartridge cover.

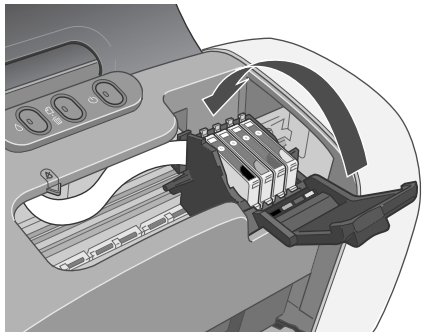

7. Press the ◊ ink button and close the printer cover.

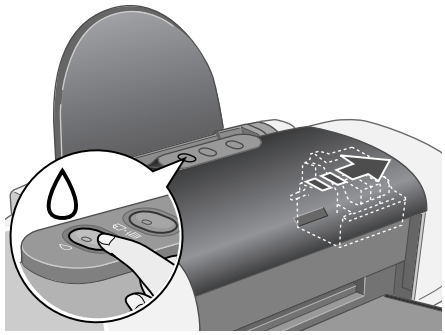

   The green ⏻ power light flashes as your printer charges ink for several seconds.

Caution:
Don't turn off the printer while the green ⏻ power light is flashing, unless the printer hasn't moved or made noise for more than 5 minutes.

Running a Printer Check

You can run a printer check to determine whether a problem comes from the printer itself or some other source.

1. Make sure both the printer and computer are turned off. Then disconnect the USB cable from the printer.
2. Make sure letter-size or larger plain paper is loaded in the printer.
3. Hold down the paper button, then press and release the power button. Continue holding down the paper button until the green power light starts to flash, then release it.

   The printer prints a nozzle check pattern. (If the pattern has gaps, you need to clean the print head; see page 8.)
4. Turn off the printer after it prints the check page. Then reconnect the cable and turn on your printer and computer.
   - ❏ If the check page prints, the problem probably lies in your software settings, the USB cable, or your computer. It's also possible that your software may not be installed correctly. See your *Start Here* sheet for instructions on reinstalling the printer software.
   - ❏ If the check page doesn't print, you may have a problem with your printer. Try the suggestions in your *Quick Guide* or online *User's Guide*. If nothing works, contact your dealer or EPSON as described on your *Start Here* sheet.

Selecting the Correct Paper Type

Your printer automatically adjusts itself for the type of paper you select in your print settings. That's why the paper Type or Media Type setting is so important. It tells your printer what kind of paper you're using and adjusts the ink coverage accordingly. The table below lists the settings you should choose for your paper:

For this paper	Select this Type or Media Type setting
Plain paper sheets or envelopes EPSON Premium Bright White Paper EPSON Photo Quality Ink Jet Paper EPSON Photo Quality Ink Jet Cards	Plain Paper / Bright White Paper
EPSON Matte Paper Heavyweight EPSON Double-Sided Matte Paper	Matte Paper - Heavyweight
EPSON DURABrite Ink Glossy Photo Paper	DURABrite Ink Glossy Photo Paper
EPSON Glossy Photo Paper EPSON Photo Paper EPSON Premium Semigloss Photo Paper	Glossy Photo Paper
EPSON Ink Jet Transparencies	Ink Jet Transparencies

Additional Paper Loading Guidelines

- ❏ Don't load paper above the arrow on the left edge guide.
- ❏ Load the printable side face-up. It's often brighter or whiter than the other side.
- ❏ Always load paper short edge first, even when printing in landscape mode.
- ❏ Load letterhead or preprinted paper into the printer top edge first.
- ❏ If you're using special media, follow the instructions that came with the media.
- ❏ You can load the following number of sheets of EPSON special media:

Paper type	Loading capacity
Premium Bright White Paper	Up to 120 sheets
Photo Quality Ink Jet Paper	80 sheets
Photo Quality Ink Jet Cards	30 cards with a support sheet beneath the stack
Glossy Photo Paper or Photo Paper	20 sheets
Matte Paper Heavyweight	20 sheets with a support sheet beneath the stack
Double-Sided Matte Paper	1 sheet
Premium Semigloss Photo Paper	20 sheets
Ink Jet Transparencies	20 sheets with a sheet of plain paper beneath the stack
DURABrite Ink Glossy Photo Paper	20 sheets

Replacing an Ink Cartridge

Caution:
To ensure good results, use genuine EPSON ink cartridges and don't refill them. Other products may cause damage to your printer not covered by EPSON's warranty.

You cannot print if a cartridge is empty. Leave any empty cartridges installed until you have obtained a replacement. Otherwise, the remaining ink in the nozzles may dry out.

Use these ink cartridges within six months of installing them and before the expiration date on the package:

- ❏ Black: T044120
- ❏ Cyan: T044220
- ❏ Magenta: T044320
- ❏ Yellow: T044420

Low ink: When the red ◊ ink light flashes, one or more ink cartridges are low on ink. When you print, you'll also see a message on the screen telling you which cartridge is low.

Empty cartridge: When the red ◊ ink light stays on, you need to replace the cartridge(s). When you print you'll also see a message on the screen telling you which cartridge is empty.

1. Turn on the printer.
2. Lower the printer's output tray, pull out the extension, and open the cover.

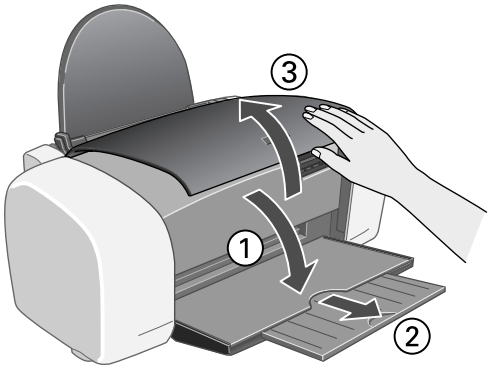

3. Press and release the ◊ ink button. The print head moves to the left, and the cartridge that needs to be replaced stops under the ⊘ ink out mark.

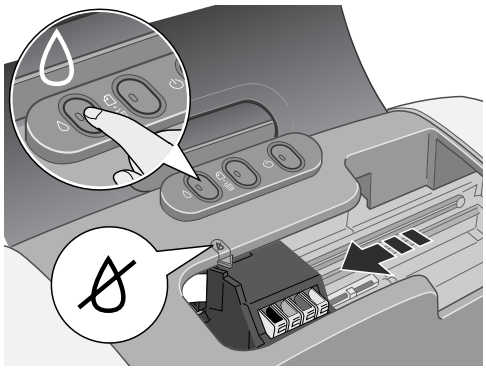

The ⏻ power light also begins to flash.

4. Press the ◊ ink button again.
   - ❑ If more than one cartridge is empty, the next cartridge moves under the ⊘ ink out mark.
   - ❑ If all the empty cartridges have been identified, the print head moves to the ink cartridge replacement position.

Note:
You can also use the Status Monitor to find out which cartridge is out of ink. See your online *User's Guide* for more information.

5. Open the cartridge cover.

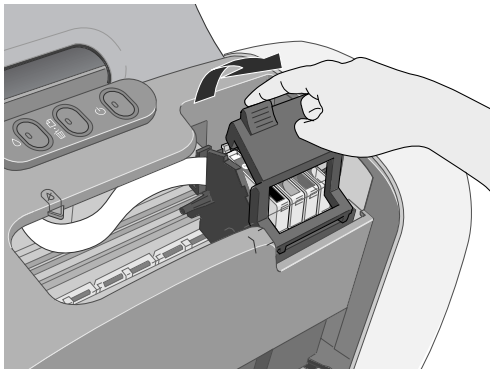

6. Pinch the back tab of the empty cartridge as you lift it out of the printer.

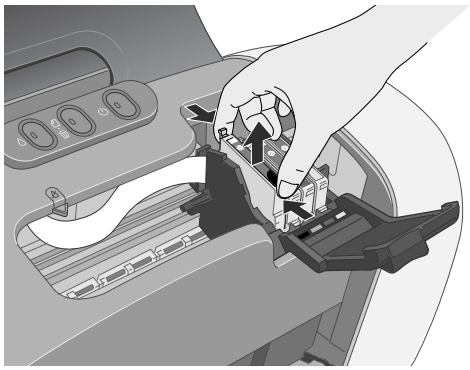

7. Before you remove the new cartridge from its package, shake it four or five times.

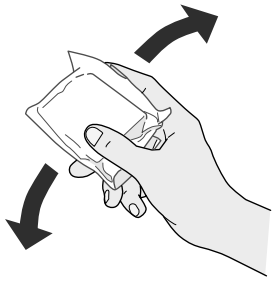

8. Unwrap the new ink cartridge and lower it into the holder. Push down gently until the cartridge is firmly seated.

Caution
Don't touch the green circuit board on the front of the cartridge; you may inhibit normal operation and printing.

9. If you need to replace other ink cartridges, repeat steps 5 through 7 before continuing with step 10.

10. Close the cartridge cover.

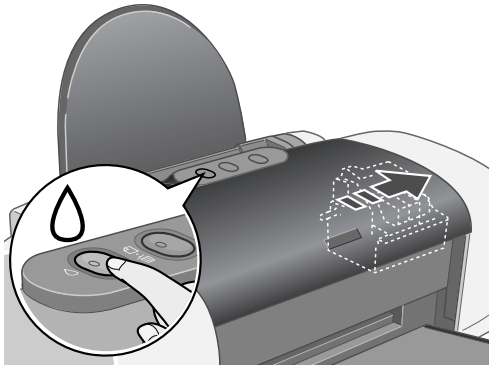

11. Close the printer cover and press the ◊ ink button. The printer begins charging the ink delivery system.

    The green ⏻ power light flashes and the printer makes noise. Charging takes about half a minute. When it's finished, the green ⏻ power light stops flashing and stays on, and the red ◊ ink light goes out.

Caution:
Never turn off the printer while the ⏻ power light is flashing, unless the printer hasn't moved or made noise for more than 5 minutes.

Cleaning the Print Head

If your printouts are unexpectedly light, or dots or lines are missing, you may need to clean the print head. This unclogs the nozzles so they can deliver ink properly. Print head cleaning uses ink, so clean it only if quality declines.

This section explains how to clean the print head using the Head Cleaning utility.

You can also clean the print head by holding down the ◊ ink button on the printer for three seconds. (This only works when the red ◊ ink light is off.

Caution:
When you don't turn on your printer for a long time, print quality can decline, so turn it on and print a few pages at least once a month to maintain good print quality.

Running the Head Cleaning Utility

1. Make sure the printer is turned on but not printing, and the red ◊ ink light is off. (If the red ◊ ink light is flashing or on, you need to replace a cartridge; see page 6 for details.)
2. Do one of the following:
   - ❑ **Windows:** right-click the printer icon on your taskbar (in the lower right corner of your screen). Select Head Cleaning.
   - ❑ **Macintosh OS X:** Open the Applications folder and select EPSON Printer Utility. Select Stylus C64 in the printer list, click OK, and select Head Cleaning.
   - ❑ **Macintosh OS 8.6 to 9.x:** Open the File menu and choose Page Setup or Print. Click the Utility button, then click the Head Cleaning button.
3. Follow the instructions on the screen to clean the print head.

   Cleaning takes about 30 seconds, during which the printer makes some noise and the green ⏻ power light flashes.

Caution:
Never turn off the printer while the ⏻ power light is flashing, unless the printer hasn't moved or made noise for more than 5 minutes.

4. When the green ⏻ power light stops flashing, make sure paper is loaded in the printer, then do the following:

   Windows: Click Print nozzle check pattern, then click Print.

   Macintosh: Click Confirmation, then click Next.

   The nozzle check pattern prints (see the next section for details).
5. If the nozzle check pattern has no gaps, click Finish.

   If the pattern has gaps, click Clean to clean the print head again.

   You can also turn the printer off and wait overnight—this allows any dried ink to soften—and then try cleaning the print head again.

Examining the Nozzle Check Pattern

Examine the nozzle check pattern you printed. Each staggered line should be solid, with no gaps, as shown:

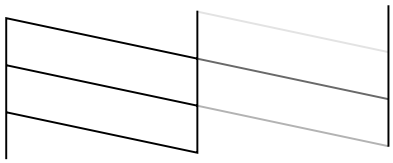

- ❏ If your printout looks okay, you're done.
- ❏ If you see any gaps (as shown below), clean the print head again; see the previous section for instructions.

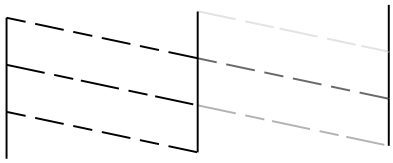

Aligning the Print Head

If your printouts contain misaligned vertical lines, or you see light or dark horizontal banding, you may need to align the print head.

1. Turn on the printer.
2. Load several sheets of paper.
3. Do one of the following:
   - ❏ **Windows:** Right-click the printer icon on your taskbar (in the lower right corner of your screen). Select Print Head Alignment.
   - ❏ **Macintosh OS X:** Open the Applications folder and select EPSON Printer Utility. Select Stylus C64 in the printer list, click OK, and select Print Head Alignment.
   - ❏ **Macintosh OS 8.6 to 9.x:** From the File menu, select Page Setup or Print. Click the Utility button, then click the Print Head Alignment button.
4. Follow the instructions on the screen to print a test page. You see a window like this one:

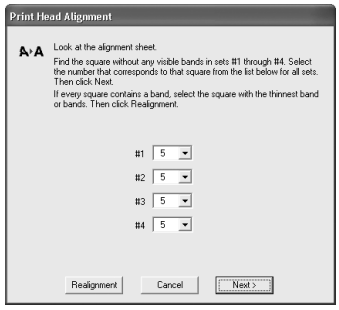

5. On the test page, select the pattern without any visible bands. You may need to use a magnifying glass or loupe.
6. Select one pattern each for rows 1 to 4, and enter the number of the best pattern in the corresponding boxes on the screen. Then click Next.

   If you can't find an aligned pattern, choose the one that's closest to being aligned. Then click Realignment to print another test page and repeat this step.
7. After you click Next, repeat steps 4 through 6.

   When you are finished you see a window like this one:

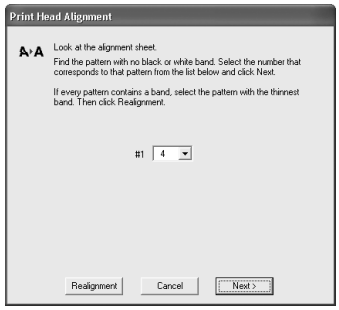

8. Follow the instructions on the screen to print the next test page.
9. On the test page, select the pair of horizontal bars with the least noticeable light or dark band between them. You may need to use a magnifying glass or loupe.
10. Enter the number of the best pattern in the corresponding box on the screen. Then click Next.

    If every pair of horizontal bars has a light or dark band between them, choose the one that looks the best. Then click Realignment to print another test page and repeat this step.
11. After you click Next, repeat steps 7 through 10.

    When you are finished, click Finish.

Cleaning the Printer

To keep your printer working at its best, you should clean it several times a year.

1. Turn off the printer, unplug the power cord, and disconnect the printer cable.
2. Remove all paper, then use a soft brush to clean any dust or dirt from the sheet feeder.
3. If the outer case or inside of the sheet feeder is dirty, clean it with a soft cloth dampened with a mild detergent. Keep the printer cover closed to prevent water from getting inside.
4. If ink accidentally gets inside the printer, wipe it off with a damp cloth.

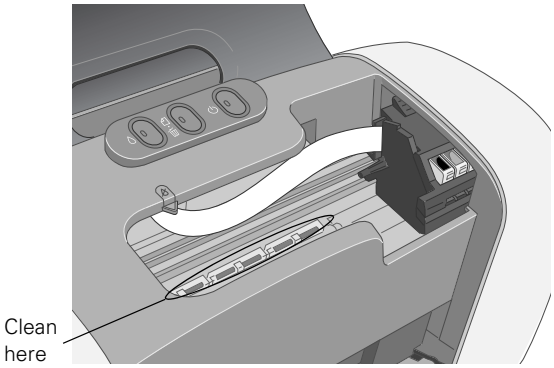

Warning:
Don't touch the gears inside the printer.

Caution:
Never use a hard or abrasive brush, alcohol, or paint thinner for cleaning; they can damage the printer components and case.

Don't get water on the printer components and don't spray lubricants or oils inside the printer.

Transporting the Printer

If you need to ship your printer, you must prepare it for transportation in its original box or one of a similar size.

Caution:
To avoid damage, remove the ink cartridges when transporting the printer.

1. Turn on the printer.
2. Remove any paper from the printer, then remove the paper support.
3. Press the ⌂ ink button. The print head moves to the ink cartridge replacement position, and the ⏻ power light begins to flash.
4. Open the cartridge cover.
5. Pinch the back tabs of the cartridges as you lift them out of the printer.

Warning:
If ink gets on your hands, wash them thoroughly with soap and water. If ink gets in your eyes, flush them immediately with water.

6. Close the cartridge cover and press the ink button. Wait until the print head locks in the far right position, then turn off the printer.
7. Unplug the power cord from the electrical outlet. Then disconnect the printer cable from the printer.
8. Remove any paper from the printer and remove the paper support.
9. Open the printer cover and secure the ink cartridge holder to the case with tape.

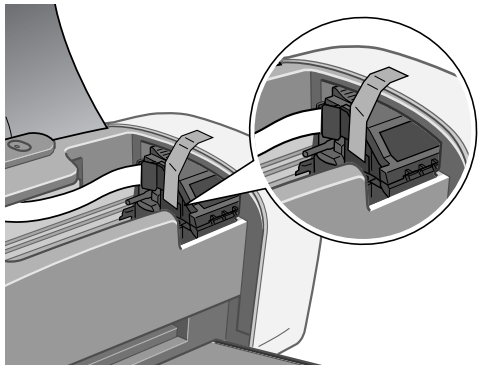

Caution:
Be sure to remove the tape after installing the printer in its new location.

10. Close the printer cover, push in the output tray extension, then close the output tray.
11. Repack the printer and its attachments in the original box using the protective materials that came with them.

Keep the printer level as you transport it.

After transporting the printer, remove the tape securing the print head. Plug in and power on your printer, install your ink cartridges, and test your printer. If you notice a decline in print quality, clean the print head (see page 8); if output is misaligned, align the print head (see page 9).

Related Documentation

CPD-16770	EPSON Stylus C64 *Start Here*
CPD-16771	EPSON Stylus C64 *Printer Basics*
CPD-16772	EPSON Stylus C64 CD-ROM with Print Show movies and HTML *User's Guide*